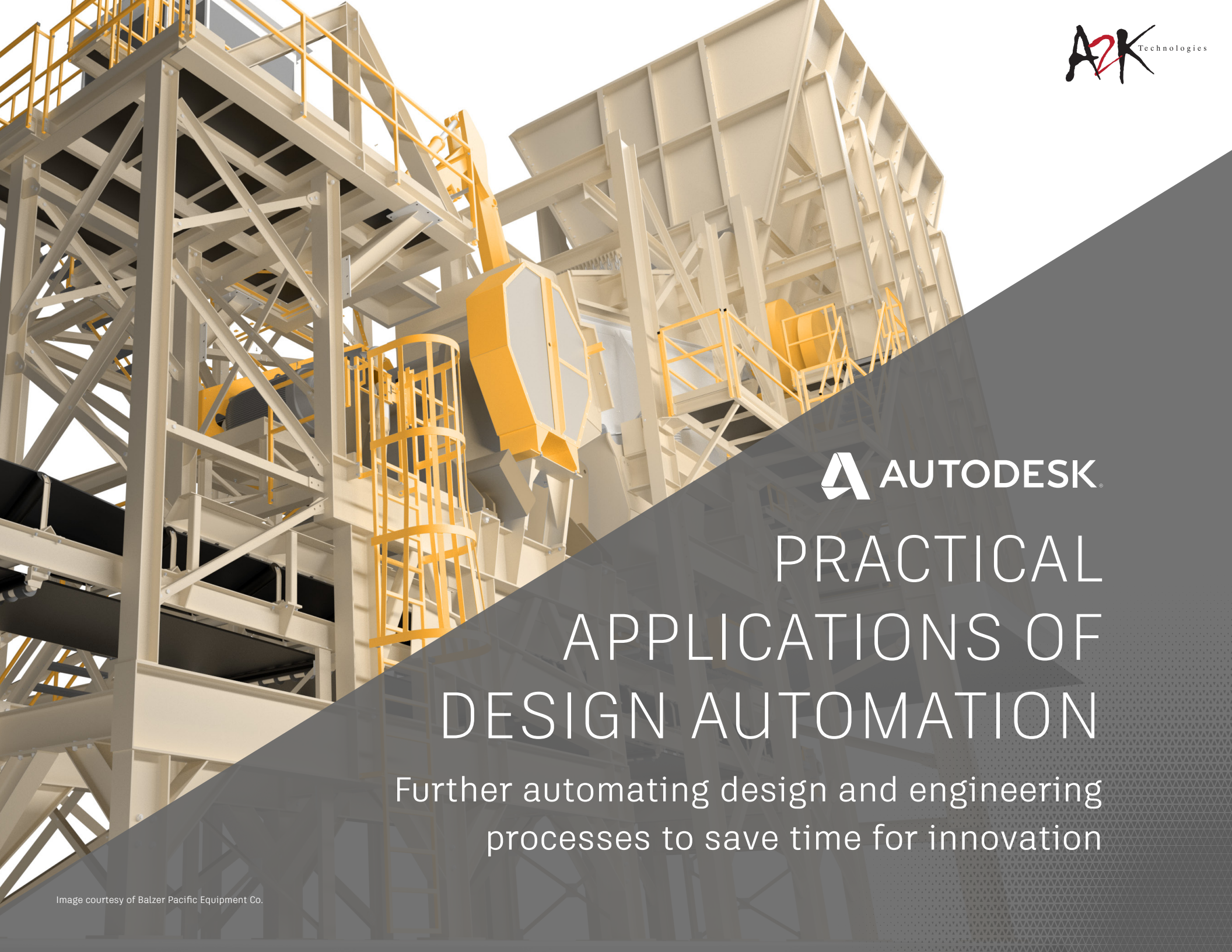

A2K Technologies

AUTODESK

PRACTICAL APPLICATIONS OF DESIGN AUTOMATION

Further automating design and engineering processes to save time for innovation

Image courtesy of Balzer Pacific Equipment Co.

Table of contents

Chapter 1 Why use design automation? 3
Chapter 2 Design intent 5
Chapter 3 Specialised tools 6
Chapter 4 Product configuration 8
Chapter 5 Drawing creation 10
Chapter 6 Standards compliance 12
Chapter 7 Batch processing 15
Chapter 8 Extending to the cloud 17
Chapter 9 Getting started 18

1 Why use design automation?

With the fast pace of modern technologies, designers and engineers constantly have new software at their fingertips that empowers them to enhance their approach to problem-solving.

With this consistent flood of new tools, it is important to consider if the 'next best thing' is critical to your workflow or if you will simply be investing in another passing trend. However, some solutions showcase such dramatic efficiency gains that there is no denying the benefits of their implementation – design automation is one of them.

Design automation is an approach that helps you capture and reuse engineering knowledge and intent. Automation technology enables you to easily use rule-based design – without needing to know how to code.

As a designer or engineer, do you find yourself spending excess time completing repetitive tasks, modelling standard features or configuring products to custom specifications? Do you wish you could free up your time to focus on projects where you add unique value, innovating to create better products?

Automation of your processes can help you advance projects to completion in mere seconds, which frees up valuable time for the tasks that require your level of skill and engineering knowledge.

No matter the size of your company, or whether you are fabricating and manufacturing many different types of products or just a few, there are likely repeatable patterns and workflows in every environment that can benefit from automation.

In this e-book, we outline a handful of practical ways you can begin automating:

Product configuration

Drawing creation

Organisational standards

Batch processing

Connecting data to PLM/ERP systems

1 Why use design automation?

'In terms of automation, I take the approach that every second counts, and if I can squeeze a single ounce more out of the system, then that's what I will do.' – **Ben Cornelius, Senior Lead CAD Modeller, Dynamic Attractions**

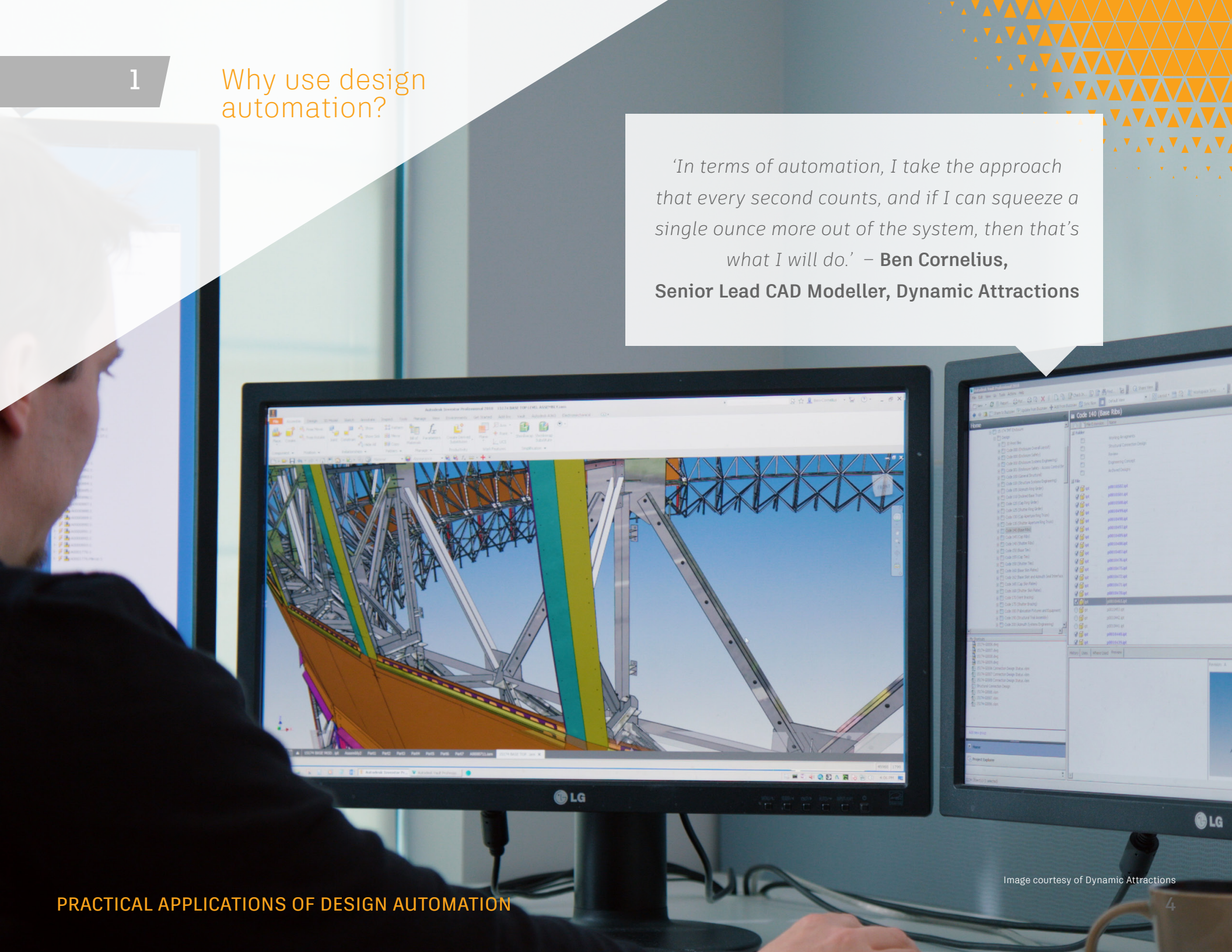

Image courtesy of Dynamic Attractions

2 Design intent

An automated approach offers options from basic parameters to cloud-based automation, but we will begin with the fundamentals – building in design intent. Your CAD software contains a rules-based system that can be used to drive parameters and attribute values in your models.

As an engineer, you are likely to be familiar with design intent, the method that defines relationships between objects and ultimately defines how your model behaves when dimensions are modified. You can streamline workflows and tasks by focusing your efforts on capturing and communicating elements of your parametric design. Then your design intent can be incorporated into your automation workflows and used to build on the work you have already completed.

Design intent can be formulas that update multiple dimensions when you change one, or design intent can set limits to dimensions, so your design does not exceed raw material sizes available in your inventory.

> *'I've had to create designs where I had to create 2,500 user parameters, and I was able to write a short little line of code to generate those parameters and populate them – it's just huge.'* – **Jason Hunt, Designer, FS-Elliott**

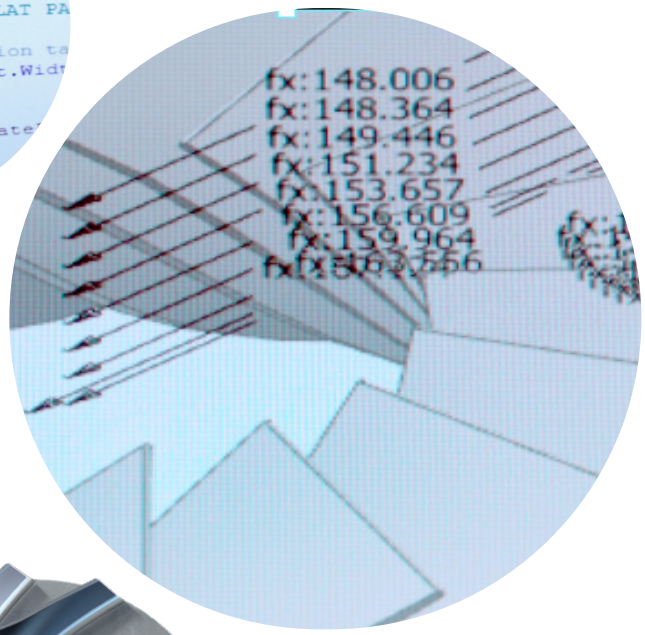

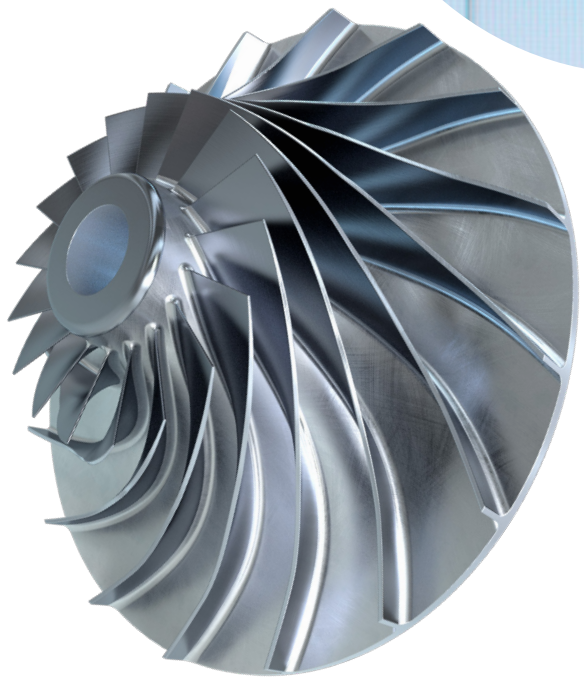

3 Specialised tools

As an engineer, it is important to move from an idea to 3D model efficiently, so you can pass product information to manufacturing as quickly as possible. Sheet metal parts and welded frames often include many standard features that make for relatively simple, yet tedious modelling that can slow this process. One of the most straightforward ways to increase efficiency is by automating the creation of standard features.

Your CAD software comes with a wide range of specialised tools that provide features specific to the type of part you are modelling.

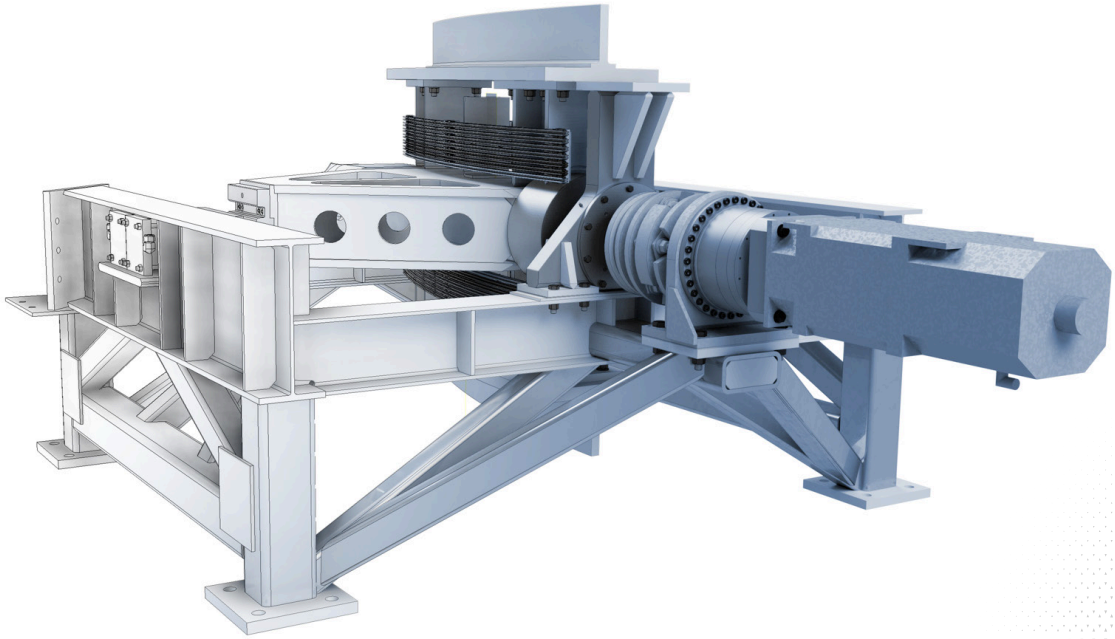

3 Specialised tools

Standard components

Included in your software is a component library that holds configurable models of the parts found in your Machinery's Handbook. This library contains items like screws, gears, sprockets and other common parts.

In a form that comes out of the box in your software, you can choose what type of part you are working on and input parameters specific to the component you are designing, and the software will produce a 3D model for you, custom to your specifications.

Sheet metal design

Following the standards you define, such as sheet metal thickness, bend allowances and corner treatments, specialised tools ensure your designs meet manufacturing requirements.

Tube and pipe design

Specialised tools contain all the hardware you need for applying your routes for threaded and welded pipe, bent tubes and flexible hoses. Simply draw the route path and specify the material and components that are included.

Weld frame design

Designing weld frames with specialised tools only requires you to build a wireframe and select a cross-section. Then let the software build the 3D model, simulate your design to ensure structural integrity and produce a cut-list for manufacturing.

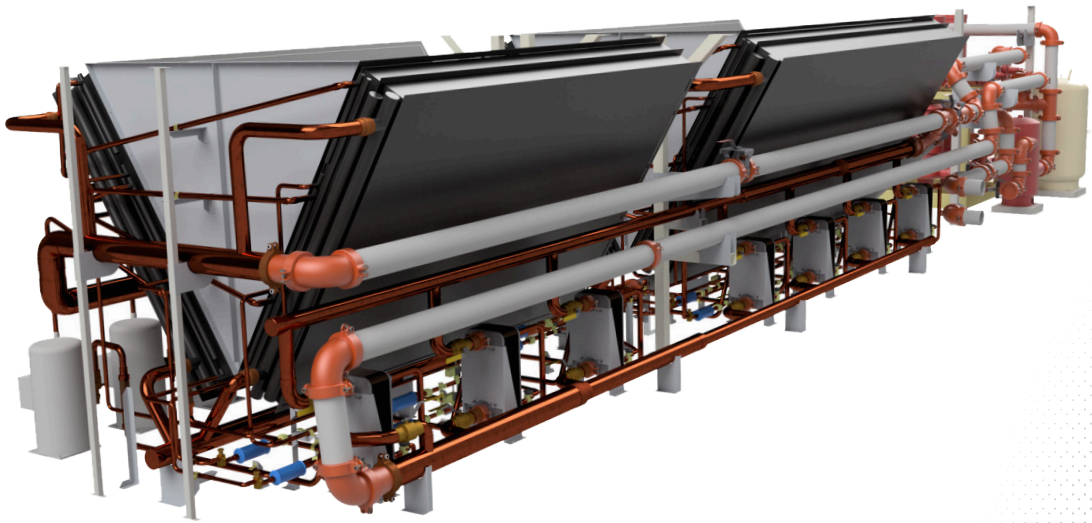

4 Product configuration

Modern-day customer demands are consistently growing in complexity. Customers see a product and think 'I want that but in a different size or with different features'. As an engineer, you have to quickly respond to customer requests, without disrupting your ability to devote time to valuable work. Automating product customisations with rule-based design is not only a key component to configuring products rapidly – it is considered a best practice of top-performing companies.

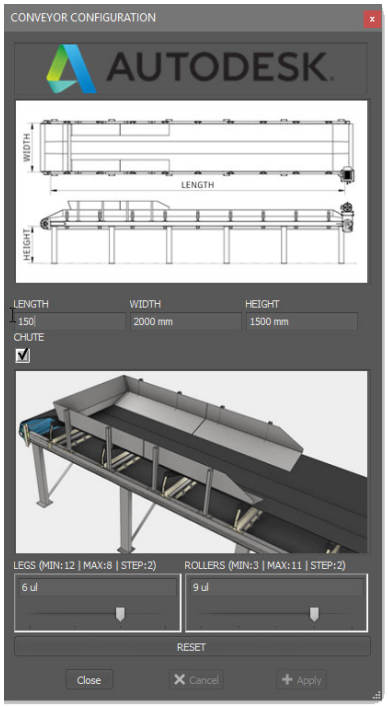

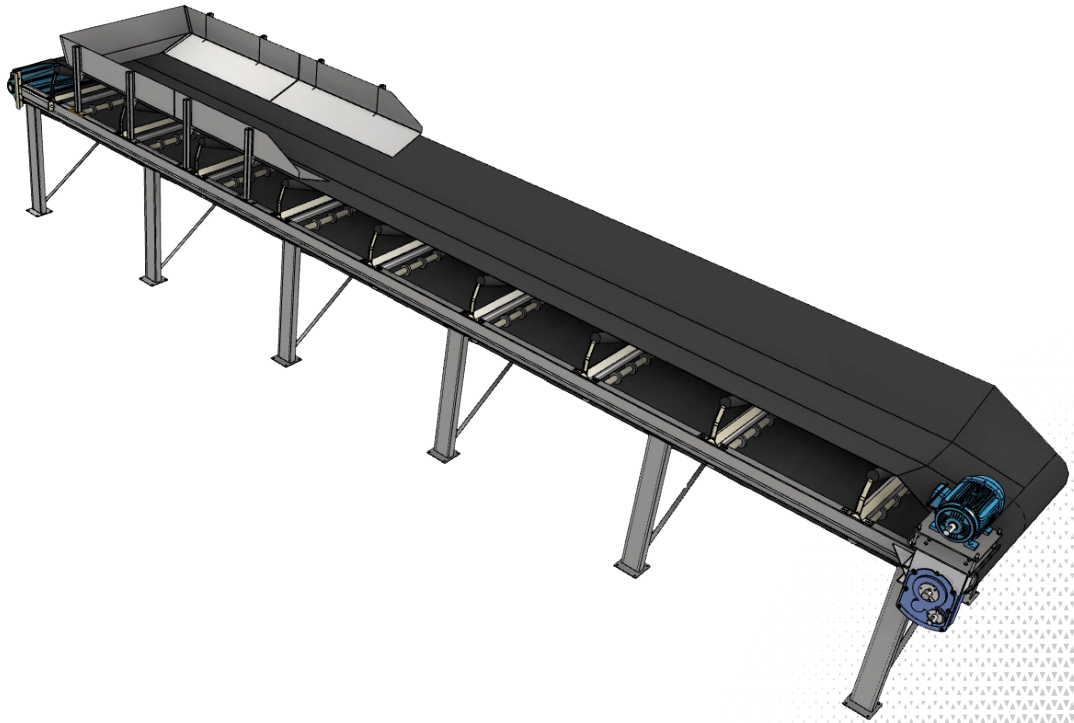

4 Product configuration

How it works

Think about the last time you reconfigured a standard model. How much time is spent on making changes to the design and all the manufacturing drawings that are sent to the shop floor? With automation, you can set rules that drive a custom product configurator right inside your CAD software and eliminate the rework that comes with repetitive tasks.

First, build the logic that drives your configurator using the parameters you already captured when creating the 3D model of your design. Essentially what you are doing is describing your design beyond the dimensions, constraints and formulas you have in your model, and you are adding engineering rules so that changes to the design specification happen automatically. Some 3D CAD systems, including Inventor, include a library of code snippets, making it easier to define these rules.

When your design intent is embedded into the 3D CAD model of your design, you can further improve the communication of your design intent by adding a form. A form is a dialogue you can add to your design to help communicate which parameters can be edited and what the result should be. This embeds knowledge into the design, making it easier for users who are unfamiliar with the design to know what changes they can make, without inadvertently creating a design that falls outside of the design scope or that cannot be manufactured.

A junior designer or even a sales engineer can configure a design to customer requirements, safe in the knowledge that they can't make any mistakes, without taking up engineering time that can be better used on your ongoing projects.

Additionally, iLogic technology in Inventor can be used to change the design of your model itself. For example, if a part gets too long, your software could automatically change the material from aluminium to steel to increase the strength for the customer's load requirement.

'Our online product configurator helps save engineering time, specifically by reducing the amount of design iterations going back and forth between the customer, sales and engineering teams.' – **Rich Cro, Operations Manager, Con-form Group**

5 Drawing creation

Creating and maintaining 2D design documentation used for quoting, fabrication or manufacturing can place a strain on engineering resources. What if the process for creating these was more predictable, repeatable and consistent? With an automated approach, you can simplify the creation of drawings, while minimising the training needed to create them.

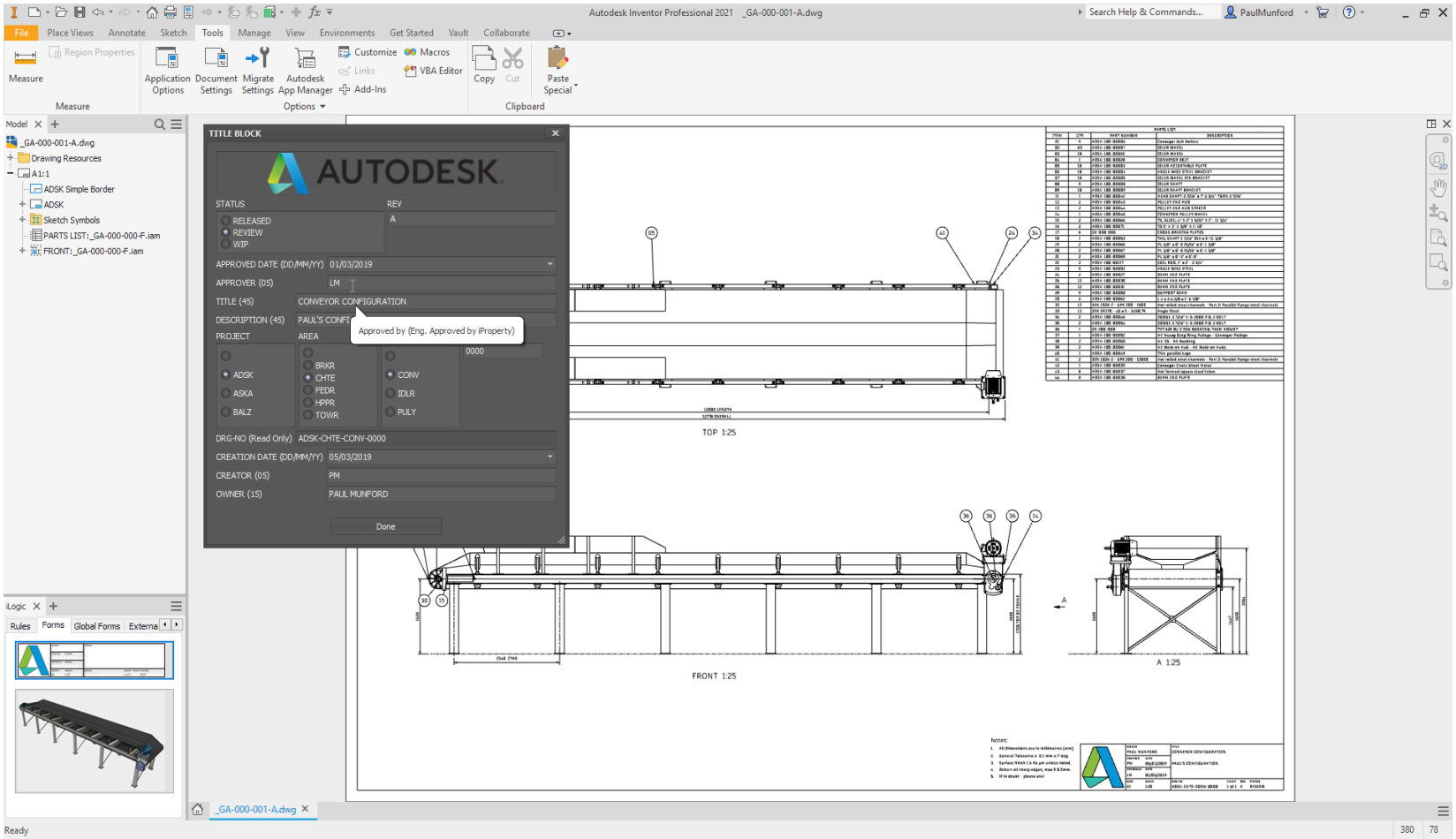

5 Drawing creation

Let's say you are a manufacturer of conveyor systems, and you have many templates for printing different sizes or for use with different customers. Depending on your business, the number of templates you have could quickly become overwhelming, especially to a newer engineer who might struggle to determine which template should be selected for different use cases.

Using automation in your CAD software, you can create a simple form for engineers to complete that will automatically generate the drawing for the specific model or component the engineer is working on. These forms might contain questions like: Should measurements be displayed in metric or imperial? Who is the customer? Is the drawing for something being fabricated or for assembling components?

By automating the creation of drawings using standard drawing templates, you can save time and increase consistency.

Using similar logic, you can also:

- Create complete drawing sets automatically
- Define and generate drawing views
- Add dimensions
- Generate or update bill of materials information and balloons
- Modify or add title block parameters
- Update old drawings to comply with new CAD standards
- Check for CAD standards compliance
- Batch publish/export

6 Standards compliance

Checking your work against company standards is a test of knowledge and excessive use of an engineer's time. Ensure everyone on your team is following best practices and consistent procedures by automating the checking process for your standards. Not only will it save you time, money and material when you manufacture correctly the first time, but it will also improve the overall quality of your products.

CAD modelling checks

CAD modelling checks are often complicated to review. Using automation, you can scan for things like fully defined sketches or consistent modelling practices. You can also check for clashes or interferences. If the components overlap or clash in your model, then they will clash in real life, which could mean a costly last-minute adjustment. Clash detection can also be used as a collaboration tool – in this case, clashing your model against another company's model to make sure that the two designs will fit together when manufactured.

Data checks

Data checks could be the most boring task in your standards compliance process, so why not let automation handle these for you? You established engineering intent during the design phase, so you are already set up to run a script that can tell you if all properties are filled out appropriately in your CAD models or if important information like the component's material is selected.

Design for manufacturing or assembly checks

It often takes more time to check and review a design than it does to create it. Many people are typically involved in the process, and everyone must agree on the best design. To allow more opportunity for the engineering review, gain significant time by automating the process of checking things like:

- Can all components be manufactured from standard sizes of raw material?
- Are there any undercuts, deep pockets or other features that can cause problems for CNC?

Drawing checks

Drawing checks require a reviewer with a sharp eye and complete knowledge of the CAD standard. This is often a sole job role at larger companies. Using automation, you can make sure CAD standards are being adhered to and title block fields are fully completed.

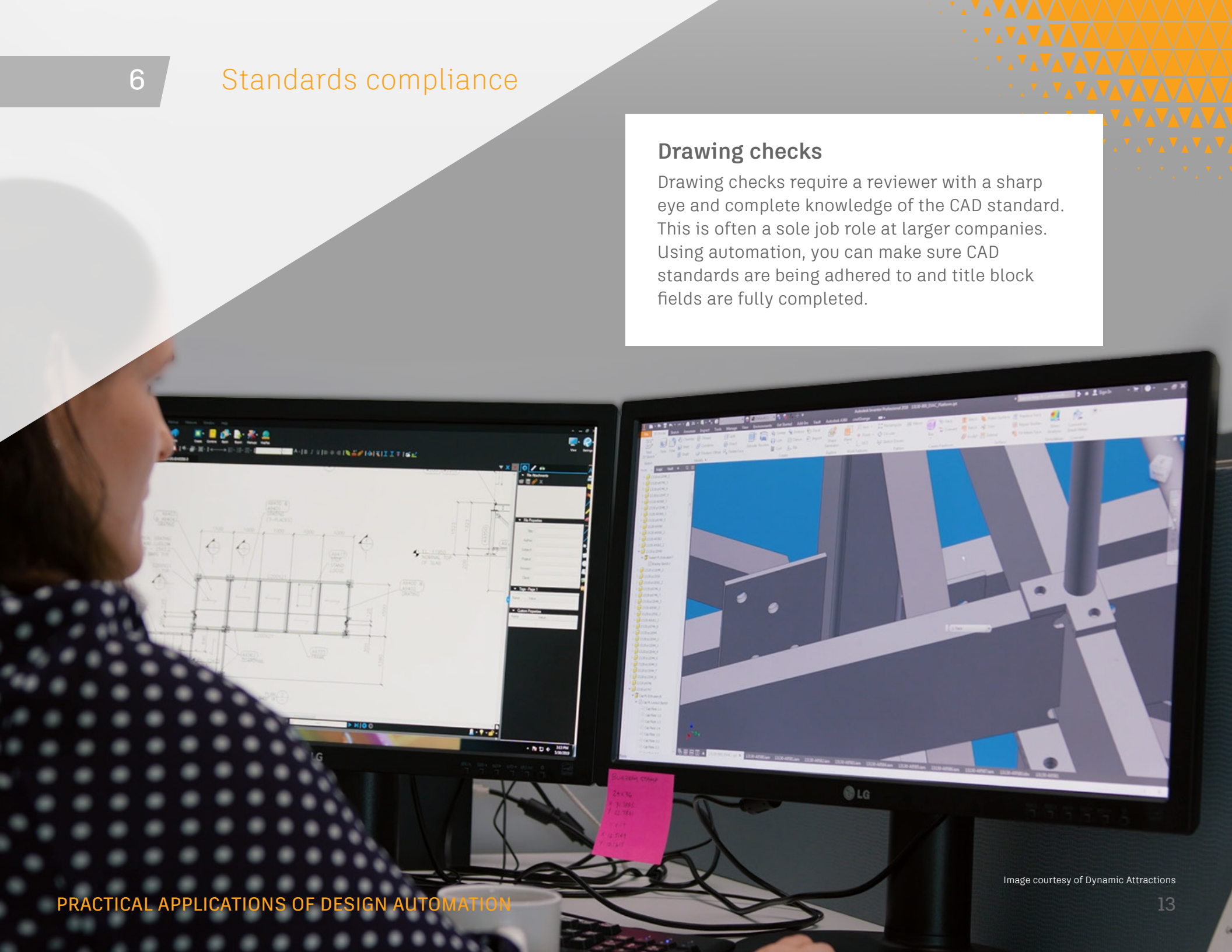

Image courtesy of Dynamic Attractions

Checking for design compliance

In the form you created to configure products, you can establish constraints and ranges so that users of the form don't configure something that your company does not or cannot make. By establishing good design intent in this form, you empower your team to complete design work confidently because they won't be able to design things using sizes and materials that can't be procured or that are outside of your company's manufacturing capabilities.

For example, imagine you are configuring a conveyer that is available in various sizes and options. If the person configuring the design increases the length of the conveyor, then an extra support (like a gusset or beam) will automatically get added to the model. You can use automation to quickly configure the assembly to any available option, all while limiting what parameters can be changed or modified.

Let's consider a second example where you are designing something being fabricated with sheet metal. The bend radius of that sheet metal depends on the type of equipment you are using on the shop floor, so you can use automation to check if you are attempting to manufacture something with materials that exceed your equipment capabilities.

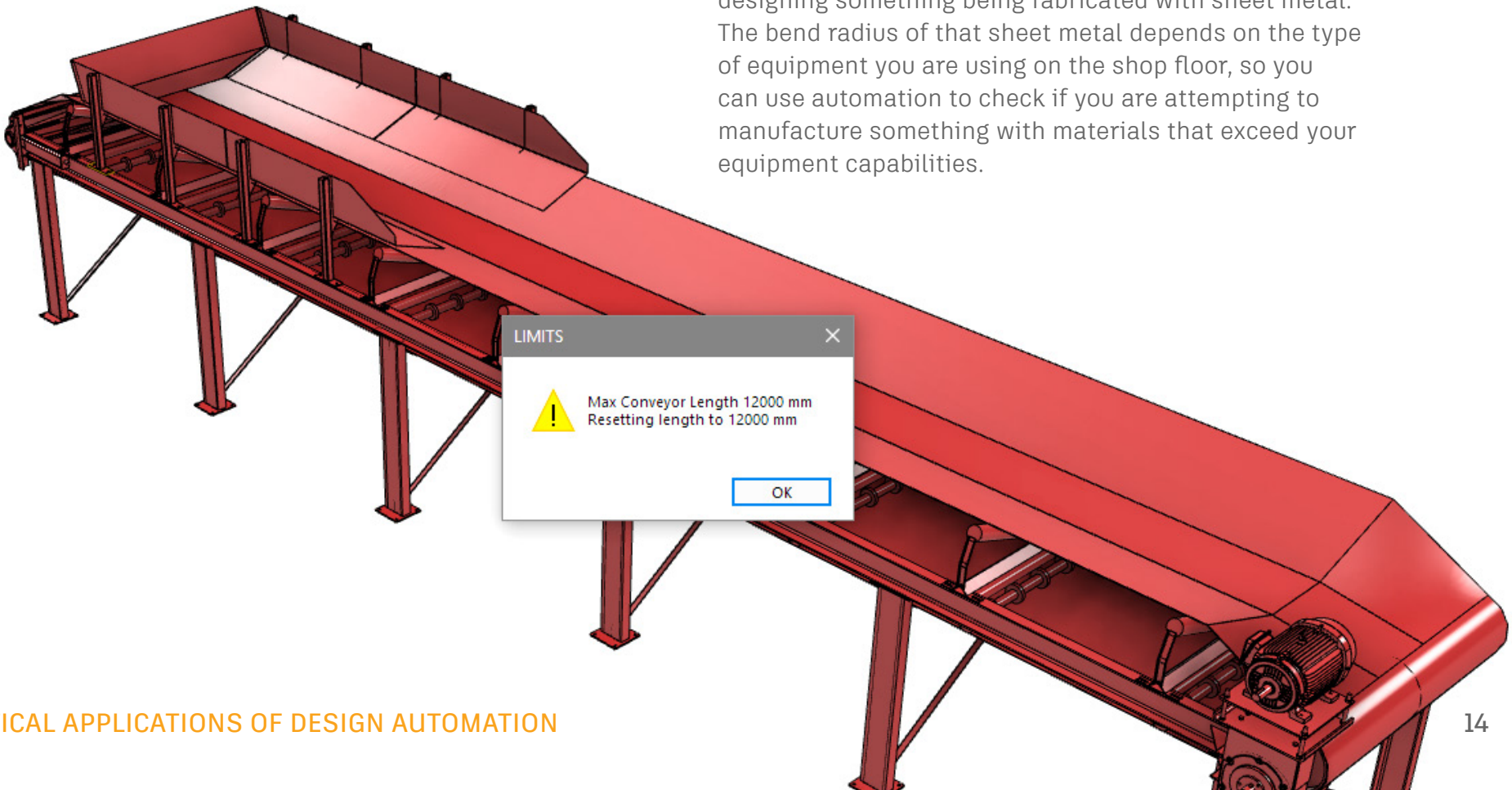

7 Batch processing

Sometimes you need to do the same thing to many models or drawings, and it is extremely time-consuming to manually complete all the necessary work. In these cases, you can use automation to batch process updates.

Model simplification

As a designer or engineer in the manufacturing world, your most valuable product is your intellectual property. You often need to share your models with outside organisations, but that does not mean you need to expose all of your proprietary information to every organisation that you do business with. With automated batch processing in your CAD tool, you can write a rule that will remove selected properties from your models before sending them to outside parties. For example, imagine you are creating a part for a car that will be manufactured by an automotive company. You need to design and deliver that part, but you probably don't want to send proprietary information about every nut and bolt included. In these cases, you can use batch processing to create a simplified representation of that model.

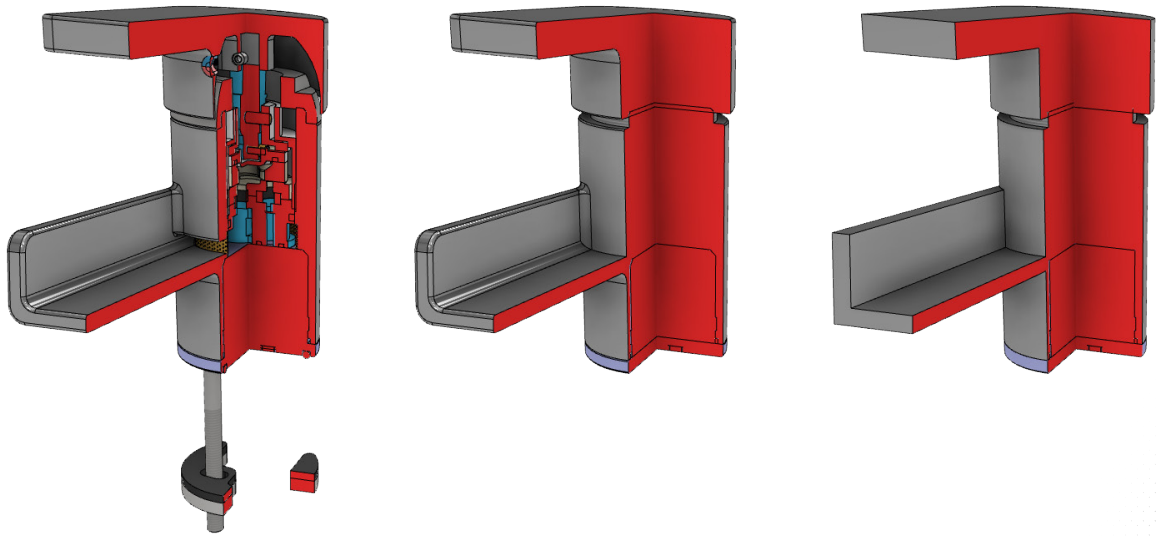

FINE MEDIUM COARSE

7 Batch processing

The same idea applies when you need to create BIM-ready (Building Information Modelling) models to share with architects, engineers or customers. You can save time by automating the simplification process, data entry and exporting of these files.

Model cleanup

Beyond stripping information away from a model, sometimes you need to clean up or adjust models and drawings that came from different CAD systems. In these cases, you can create a batch process that will bulk update those models and drawings per your company standards.

For example, if you receive a folder of drawings and they are all missing information from the title block, you can run a process that opens all of them and adds the information you need. Or perhaps you are making a machine design and your company would like to standardise on colours that signify whether a component was purchased or created in-house. You can batch process updates to any incoming files that would make them all a designated colour in your model. Additionally, you can do the same thing if someone on your team accidentally overwrites the colours in your assembly.

You might consider this use case your own version of find and replace. Find a problem in the design and replace it with the solution.

Other ways to use batch processing:

Batch printing

Use automation to print all drawings for a design or in a selected folder.

Batch imports and exports

Write an automation script that opens all the neutral format files someone sent you and save them as parts.

Cleaning up data sets

To make all data set thumbnails look consistent, use automation to open every component and resave with the same display settings.

Converting documents

Use automation to convert files from DWG™ to PDF format.

8 Extending to the cloud

Once you have spent time defining automations that streamline your workflows, you can begin considering ways to expand your level of efficiency even more by extending your automation to the cloud to support corporate initiatives.

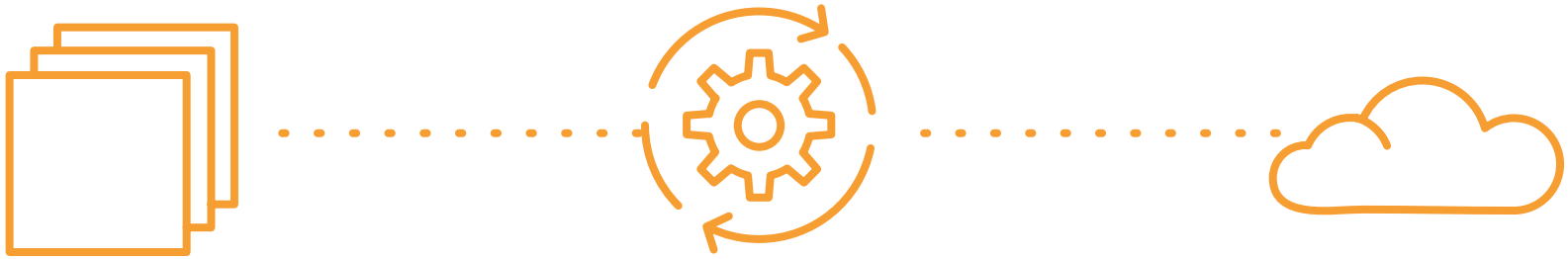

Running scripts

With automation APIs, you can run your configurations on the cloud and continue to work efficiently on your local machine. These types of jobs could be highly repetitive or may need large-scale processing power.

Leveraging data across IT and OT systems

The automation API enables you to exchange product data with various business systems such as ERP, MRP, MES, PLM and CRM for production. By linking data in the cloud to other systems, you can leverage third-party data formats in your automation workflows.

Empowering your sales team

Automation can streamline the product ordering process for your sales team and customers. By extending your product configurator to the cloud, your sales team can:

- Respond faster to customer enquiries and quickly generate more bids or proposals at a lower cost
- Ensure complete and accurate quoting for sales configurators
- Supply technical drawings or 3D CAD models of the configured design

9 Getting started

With design automation, there is no one-size-fits-all answer for where to begin. Automation is a scalable and customisable approach, which means you can increase scope over time as your organisation matures. Yet as customer demands change and products become more complex, an automated approach will become an increasingly crucial element of staying competitive in your industry.

Everything you automate, big or small, can make a positive impact. The work you do on even the smallest projects can be repurposed later, and you never lose the work that you put into a project. Whether you are manufacturing air compressors, designing custom stairways or developing products for the building sector, don't stress too much about where to begin. The opportunity lies in just getting started.

To learn more about getting started with the design automation options that are right for you:

Contact an Autodesk representative today at

1800 951 919

Visit our solution centre

LEARN MORE

A2K Technologies

AUTODESK

Autodesk, the Autodesk logo, Inventor and DWG are registered trademarks or trademarks of Autodesk, Inc., and/or its subsidiaries and/or affiliates in the USA and/or other countries. All other brand names, product names or trademarks belong to their respective holders. Autodesk reserves the right to alter product and services offerings, and specifications and pricing at any time without notice, and is not responsible for typographical or graphical errors that may appear in this document. © 2020 Autodesk, Inc. All rights reserved.